# DS-7616NXI-K2
# 16-ch 1U K Series AcuSense 4K NVR




- Up to 16-ch IP camera inputs
- H.265+/H.265/H.264+/H.264 video formats
- Up to 2-ch@12 MP or 3-ch@8 MP or 6-ch@4 MP or 12-ch@1080p decoding capacity
- Up to 160 Mbps incoming bandwidth
- Adopt Hikvision Acusense technology to minimize manual effort and security costs

## ▪ Function

Smart Function

- All channels support Motion Detection 2.0
- 2-ch video analysis for human and vehicle recognition to reduce false alarm
- 1-ch facial recognition for video stream, or 4-ch facial recognition for face picture
- Smart search for the selected area in the video, and smart playback to improve the playback efficiency

Professional and Reliability

- H.265+ compression effectively reduces the storage space by up to 75%
- Adopt stream over TLS encryption technology which provides more secure stream transmission service

HD Video Output

- Provide independent HDMI and VGA outputs
- HDMI video output at up to 4K resolution

Storage and Playback

- Up to 2 SATA interfaces for HDD connection (up to 10 TB capacity per HDD)
- 16-ch synchronous playback

Network & Ethernet Access

- 1 self-adaptive 10/100/1000 Mbps Ethernet interface
- Hik-Connect for easy network management

## ▪ Specification

| | |
|---|---|
| **Intelligent Analytics** | |
| AI by Device | Facial recognition, perimeter protection, motion detection 2.0 |
| AI by Camera | Facial recognition, perimeter protection, throwing objects from building, motion detection2.0, ANPR, VCA |
| **Facial Recognition** | |
| Facial Detection and Analytics | Face picture comparison, human face capture, face picture search |
| Face Picture Library | Up to 16 face picture libraries, with up to 20,000 face pictures in total (each picture ≤ 4 MB, total capacity ≤ 1 GB) |
| Facial Detection and Analytics Performance | 1-ch, 8 MP |
| Face Picture Comparison | 4-ch |
| **Motion Detection 2.0** | |
| By Device | All channels, 4 MP (when enhanced SVC mode is enabled, up to 8 MP) video analysis for human and vehicle recognition to reduce false alarm |
| By Camera | All channels |
| **Perimeter Protection** | |
| By Device | 2-ch, 4 MP (HD network camera, H.264/H.265) video analysis for human and vehicle recognition to reduce false alarm |
| By Camera | All channels |
| **Video and Audio** | |
| IP Video Input | 16-ch |
| Incoming Bandwidth | 160 Mbps |
| Outgoing Bandwidth | 160 Mbps |
| HDMI Output | 1-ch, 4K (3840 × 2160)/30 Hz, 2K (2560 × 1440)/60 Hz, 1920 × 1080/60 Hz, 1600 × 1200/60 Hz, 1280 × 1024/60 Hz, 1280 × 720/60 Hz, 1024 × 768/60 Hz |
| VGA Output | 1-ch, 1920 × 1080/60 Hz, 1280 × 1024/60 Hz, 1280 × 720/60 Hz |
| Video Output Mode | HDMI/VGA independent output |
| CVBS Output | N/A |
| Audio Output | 1-ch, RCA (2.0 Vp-p, 1 KΩ, using the audio input) |
| Two-Way Audio | 1-ch, RCA (Linear, 1 KΩ) |
| **Decoding** | |
| Decoding Format | H.265/H.265+/H.264+/H.264 |
| Recording Resolution | 12 MP/8 MP/6 MP/5 MP/4 MP/3 MP/1080p/UXGA/720p/VGA/4CIF/DCIF/2CIF/CIF/QCIF |
| Synchronous playback | 16-ch |
| Decoding Capability | AI on: 1-ch@12 MP (30 fps)/2-ch@8 MP (30 fps)/4-ch@4 MP (30 fps)/8-ch@1080p (30 fps)<br>AI off: 2-ch@12 MP (30 fps)/3-ch@8 MP (30 fps)/6-ch@4 MP (30 fps)/12-ch@1080p (30 fps)<br>Smooth Playback (HC) ON & AI ON: 1-ch@12 MP (30 fps)/1-ch@8 MP (30 fps)/3-ch@4 MP (30 fps)/7-ch@1080p (30 fps)<br>Smooth Playback (HC) ON & AI OFF: 1-ch@12 MP (30 fps)/2-ch@8 MP (30 fps)/5-ch@4 MP (30 fps)/11-ch@1080p (30 fps) |
| Stream Type | Video, Video & Audio |

| | |
|---|---|
| Audio Compression | G.711ulaw/G.711alaw/G.722/G.726/AAC |
| **Network** | |
| Remote Connection | 128 |
| API | ONVIF (profile S/G); SDK; ISAPI |
| Compatible Browser | IE11, Chrome V57, Firefox V52, Safari V12, Edge V89, or above version |
| Network Protocol | TCP/IP, DHCP, IPv4, IPv6, DNS, DDNS, NTP, RTSP, SADP, SMTP, SNMP, NFS, iSCSI, ISUP, UPnP™, HTTP, HTTPS |
| Network Interface | 1 RJ-45 10/100/1000 Mbps self-adaptive Ethernet interface |
| **Auxiliary Interface** | |
| SATA | 2 SATA interfaces |
| Capacity | Up to 16 TB capacity for each HDD |
| USB Interface | Front panel: 1 × USB 2.0; Rear panel: 1 × USB 2.0 |
| Alarm In/Out | 4/1 |
| **General** | |
| GUI Language | English, Russian, Bulgarian, Hungarian, Greek, German, Italian, Czech, Slovak, French, Polish, Dutch, Portuguese, Spanish, Romanian, Turkish, Japanese, Danish, Swedish Language, Norwegian, Finnish, Korean, Traditional Chinese, Thai, Estonian, Vietnamese, Croatian, Slovenian, Serbian, Latvian, Lithuanian, Uzbek, Kazakh, Arabic, Ukrainian, Kyrgyz, Brazilian Portuguese, Indonesian |
| Power Supply | 12 VDC, 3.3 A |
| Consumption | ≤ 15 W (without HDD) |
| Working Temperature | -10 °C to 55 °C (14 °F to 131 °F) |
| Working Humidity | 10% to 90% |
| Dimension (W × D × H) | 385 mm × 315 mm × 52 mm (15.2"× 12.4" × 2.0") |
| Weight | ≤ 1 kg (without HDD, 2.2 lb.) |
| **Certification** | |
| FCC | Part 15 Subpart B, ANSI C63.4-2014 |
| CE | EN 55032: 2015, EN 61000-3-2, EN 61000-3-3, EN 50130-4, EN 55035: 2017 |
| Obtained Certification | CE, FCC, IC, CB, KC, UL, Rohs, Reach, WEEE, RCM, UKCA, LOA, BIS |

## ▪ Physical Interface

| No. | Description | No. | Description |
|---|---|---|---|
| 1 | LAN network interface | 6 | USB interface |
| 2 | AUDIO IN and AUDIO OUT | 7 | Power supply |
| 3 | ALARM IN and ALARM OUT | 8 | Power switch |
| 4 | HDMI interface | 9 | GND |
| 5 | VGA interface | | |

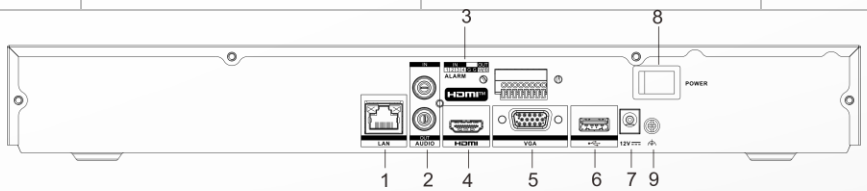


## ▪ Available Model

DS-7616NXI-K2(STD)

DS-7616NXI-K2(NEU)

DS-7616NXI-K2(STD)/India-L

DS-7616NXI-K2(STD)/KH MENGLY

DS-7616NXI-K2(STD)/ID FULLMOON

## ▪ Dimension

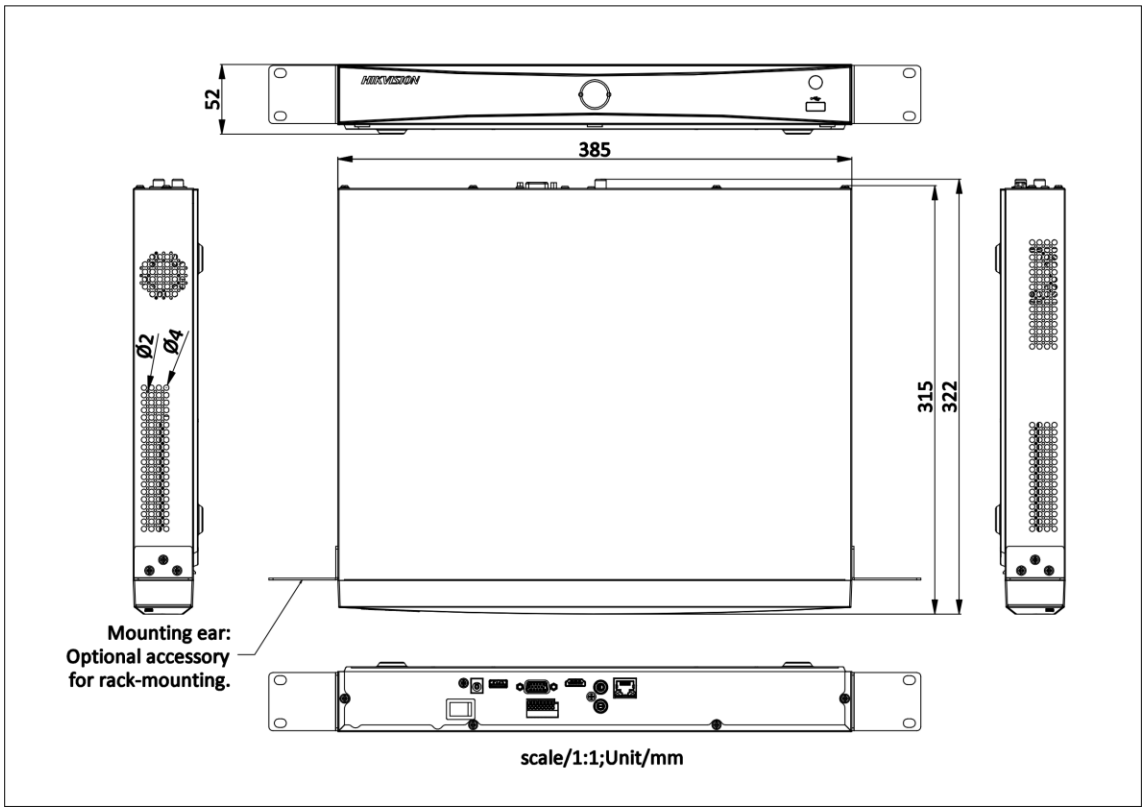

See Far, Go Further

www.hikvision.com
support@hikvision.com

© Hangzhou Hikvision Digital Technology Co., Ltd. Unless otherwise agreed, Hikvision makes no warranties, express or implied. We reserve the right to introduce modifications without notice.

HIKVISION®